CORE HEALTH AND FITNESS

Red: PAINTED ITEMS

Blue: KITS

1. **All labeled components are to be assembled before shipment unless otherwise noted.**
2. **All bearings are to be pressed in with force applied to outer ring only.**
3. **All hardware to be forqued to specs listed in chart below.**
4. **Special notes if any are shown below.**

REVISIONS

ECO	REVISION	REV DESCRIPTION	APPROVED	DATE
022015-A	A	Initial Release	GMW	02/20/15
042915-B	B	Removed 4 Revnuts	GMW	4/29/2015
	C	Removed 2 flat washers from weight st bumpers	RCA	8/3/2015
	D	Changed Upholstery Part # (added -00XX)	RCA	8/3/2015
080715-B	E	Added 6 M10 Cage Nuts	GMW	8/17/2015
090815-C	F	Made cable assemblies symmetric with regards to hardware. Removed 04-5252 on bolt head side on 731-0389 from each cable keeper.	MBS	8/20/2015
091815-B	G	ADDED SCREWS, 02-4086, TO ATTACH WOOD TRIM 27-0077-01	RCA	9/28/2015
092815-A	H	REVISED 27-0085 TO MOLDED PART, DELETED 05-1040	RCA	9/29/2015

ITEM	PART NO.	Default/QTY.	DESCRIPTION
1	01-1011	2	Allen Socket Cap Head Bolt Serrated Shoulder M12-1.75x70mm
2	01-9315	4	BOLT,M6X1.00,16MM,HHC,HE,CS
3	01-9316	2	BOLT,M8X1.25,40MM,HHC,HE,CS
4	01-9317	2	BOLT M10 X 1.5 45MM HHC HE CS ZP
5	01-9319	2	SCREW,M10 X 1.5,90MM,BHC,HK, ZP
6	01-9321	4	BOLT M10 X 1.5 25MM HHC HE CS ZP
7	02-4086	8	SCREW, M6 X 16 PAN TORX, ZP, THD FORMER
8	02-9318	2	SCREW, M10-1.5x16 SHC, HK, AS, ZP
9	02-9321	4	SCREW M8 X 1.25 30MM SHC HK AS, ZP
10	02-9322	2	SCREW M10 X 1.5 20MM BHC HK, ZP
11	02-9323	2	SCREW M6 X 1.0 20MM BHC HK ZP
12	02-9329	8	SCREW M10 X 1.5, 25 MM BHC HK, ZP
13	03-3043	1	5/16" Lock Nut
14	03-4067	4	EXTRUDED U-NUT M8 X 1.25
15	03-4248	6	Cage Nut 10mm for Panel 4.1 - 5.3mm
16	03-5203	8	NUT,M10x1.5,ACORN, CL6
17	03-5204	2	NUT,M12x1.75,ACORN, CL6
18	04-5251	6	LOCK WASHER, M6
19	04-5252	26	LOCK WASHER, M8
20	04-5253	30	LOCK WASHER, M10
21	04-5256	10	LOCK WASHER M12
22	050-2022	1	STICKER,STAR TRAC,DECO, 23MM X 99MM
23	050-2212	2	STICKER,SWITCH,HS
24	050-2213	1	DECAL, WEIGHT STACK - HS
25	050-2224	1	STICKER,LNL, HS (LEFT & RIGHT)
26	050-2225	2	DECAL, WARNING MULTI LANGUAGE - HS
27	050-2226	1	PLACARD, ARM/CRUNCH, HS
28	06-5020	4	CLIP, CARABINEER
29	06-8016	1	Cable Assembly HS- AC
30	06-8016	1	Cable Assembly HS- AC
31	07-9170	2	BALL STUD
32	09-8341	8	120mm OD pulley with 17mm ID Bearing
33	10-3042	1	LIFT-O-MAT 200N GAS SPRING
34	110-3422	8	SCREW, M12X1.75X20, BHC
35	12-1655	4	PLUG-PRY OUT, .205 DIA
36	12-1688	2	HumanSport Tower Decal
37	12-8013	1	TAG, ASSEM. DIMS, HSAC2
38	12-8016	1	Decal Seat Back Range- HSAC
39	27-0035	6	Cover, Pulley, Flat Steel
40	27-0036	10	SPACER, PULLEY BRACKET, HUMAN SPORT
41	27-0040	2	Bracket, Pulley Top Weight, Front, HS
42	27-0041	2	Bracket, Pulley Top Weight, Rear, HS
43	27-0047	4	ASSY,SWIVEL,HANDLE,HUMAN SPORT
44	27-0060	1	Shield, HS Tower, Front, Left
45	27-0061	1	Shield, HS Tower, Front Right
46	27-0062	1	Shield, HS Tower, Rear
47	27-0063	2	Shield, HS Tower, Left/Right
48	27-0074	1	Plate, Index Locking, Seat back, HS-AC
49	27-0085	2	Hub Adapter Molded

ITEM	PART NO.	Default/QTY.	DESCRIPTION
50	27-0087	1	Axle, Pivot, Seat Back, HS-AC
51	27-0109	2	Counter Weight for HS Swivel Brkt, Thin
52	27-0110	2	Counter Weight for HS Swivel Brkt, Thick
53	60-2000	1	Human Sport Weight Tower
54	61-2010	1	HS Arm Crunch Top Plate Assembly
55	63-2000	1	Linkage, Tower Pulley, HS
56	63-2001	1	HS-Arm Crunch Adjustable Seat Back
57	66-2003	1	HS Arm Crunch Seat Frame
58	68-2001	1	Extension Arm Lower Left HS-AC
59	68-2002	1	Extension Arm HS-AC Lower Right
60	730-0126	2	GRIP HANDLE, STARTRAC, 6"
61	730-0127	2	STRAP, CRUNCH, HS
62	730-1559	4	GUIDE RODE,Ø22MM X 1438MM
63	731-0040	2	STOP,Ø50X26,RUBBER
64	731-0111	4	STOP,BUMPER,WGT PLT
65	731-0112	4	SET COLLAR, GUIDE ROD, 22.4mm I.D.
66	731-0124	4	CAP,GUIDE ROD,RUBBER
67	731-0165	6	CAP,PLASTIC,PULLEY,Ø120mm
68	731-0169	8	SCREW, M8X1.25,20MM, BHC, HK, ZP
69	731-0209	2	CAP, END, 110 X 50
70	731-0225	2	SCREW,M3.5 X 9.5,SELF TAPPING
71	731-0266-00XX	1	ASSY,UPPER BACK PAD,AB
72	731-0359	2	SCREW,M8 X 1.25,25mm,BHC,HK, ZP
73	731-0362	6	SCREW,M10 X 1.5,45MM,BHC,HK, ZP
74	731-0363	6	NUT,M10X1.5,NYLOC
75	731-0364	2	SCREW, M8X1.25, 45mm, BHC, HK, ZP
76	731-0365	18	NUT,M8 X 1.25,NYLOC JAM
77	731-0367	8	WASHER,PLAIN,M10
78	731-0368	4	SCREW,M8 X 1.25,40mm,BHC,HK, ZP
79	731-0373	4	WASHER,PLAIN,M6
80	731-0389	6	SCREW,M8 X 1.25,35mm,BHC,HK, ZP
81	731-0512	8	STICKER,CAUTION,PINCH
82	731-0517	2	STICKER, WARNING, BOLT DOWN
83	731-0678	1	AB CRUNCH SEAT BACK RIGHT
84	731-0679	1	AB SEAT BACK LEFT
85	731-1357	2	CAP, BEARING 1 3/4 RND
86	731-1448	2	NUT,M8 x 1.25,ACORN, CL6
87	731-2647	3	FOOT,LONG,LEVERAGE
88	731-3780	2	SCREW,M6 X1.0, 35mm, BHC,HK, ZP
89	731-5762	2	NUT,M6 x 1.0, ACORN, CL6
90	731-6209	1	ASSY,PULL PIN,12.5 X 102.5 PIN
91	91-999	1	Paint (1.5 lbs)
92	95-0687	2	KIT SWIVELING PULLEY ASSEMBLY
93	95-0687	2	KIT SWIVELING PULLEY ASSEMBLY
94	95-0695	1	Human Sport Wood Trim Kit
95	OPT-WT-33	1	Human Sport Weight Stack-Right
96	OPT-WT-33	1	Human Sport Weight Stack-Left
97	SM20473	1	TYRAP, 1/8" X 4"

Bolt Torque Specifications		
	CL 8.8	CL 10.9
Size	Torque (N-M)	Torque (N-M)
M4-.7	3.1	
M6-1	10.4	15.5
M8-1.25	25	37
M10-1.5	51	75
M12-1.75	87	160
M14-2	140	205

Customer Service & Parts 800-503-1221
General Parts Requests: support@startrac.com
Core Health and Fitness, LLC.
support.startrac.com

HSAC2

REV H

Red: PAINTED ITEMS
Blue: KITS

1. All labeled components are to be assembled before shipment unless otherwise noted.
2. All bearings are to be pressed in with force applied to outer ring only.
3. All hardware to be torqued to specs listed in chart below.
4. Special notes if any are shown below.

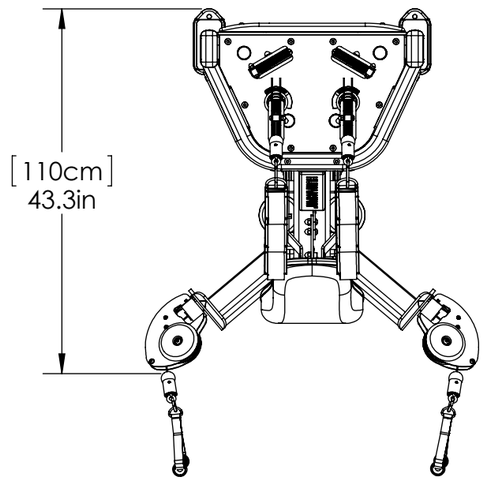

HSAC2 1-16-2015		
Description	US	Metric
Width	40 1/4"	102 cm
Depth	43 3/8"	110 cm
Height	68"	173 cm
Weight	674 lbs	306 Kgs

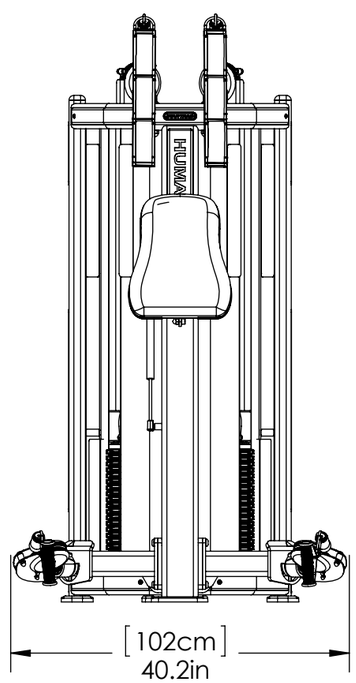

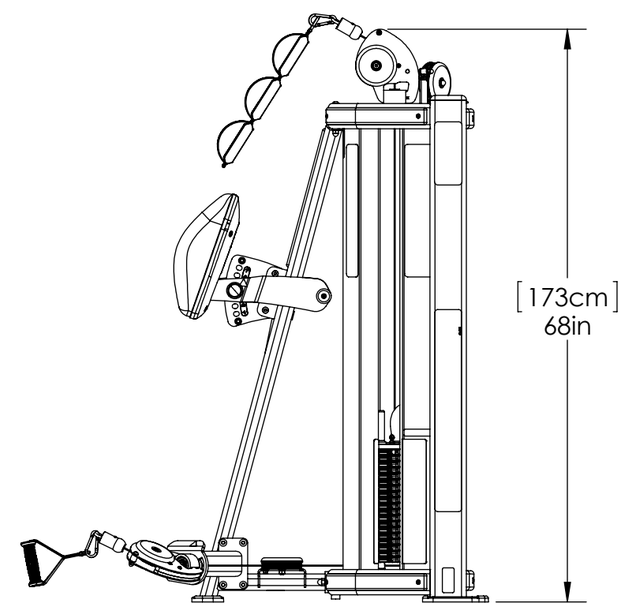

Bolt Torque Specifications		
	CL 8.8	CL 10.9
Size	Torque (N-M)	Torque (N-M)
M4-.7	3.1	
M6-1	10.4	15.5
M8-1.25	25	37
M10-1.5	51	75
M12-1.75	87	160
M14-2	140	205

Customer Service & Parts 800-503-1221
General Parts Requests: support@startrac.com
Core Health and Fitness, LLC.
support.startrac.com

HSAC2

REV H

Red: PAINTED ITEMS
Blue: KITS

1. **All labeled components are to be assembled before shipment unless otherwise noted.**
2. **All bearings are to be pressed in with force applied to outer ring only.**
3. **All hardware to be torqued to specs listed in chart below.**
4. **Special notes if any are shown below.**

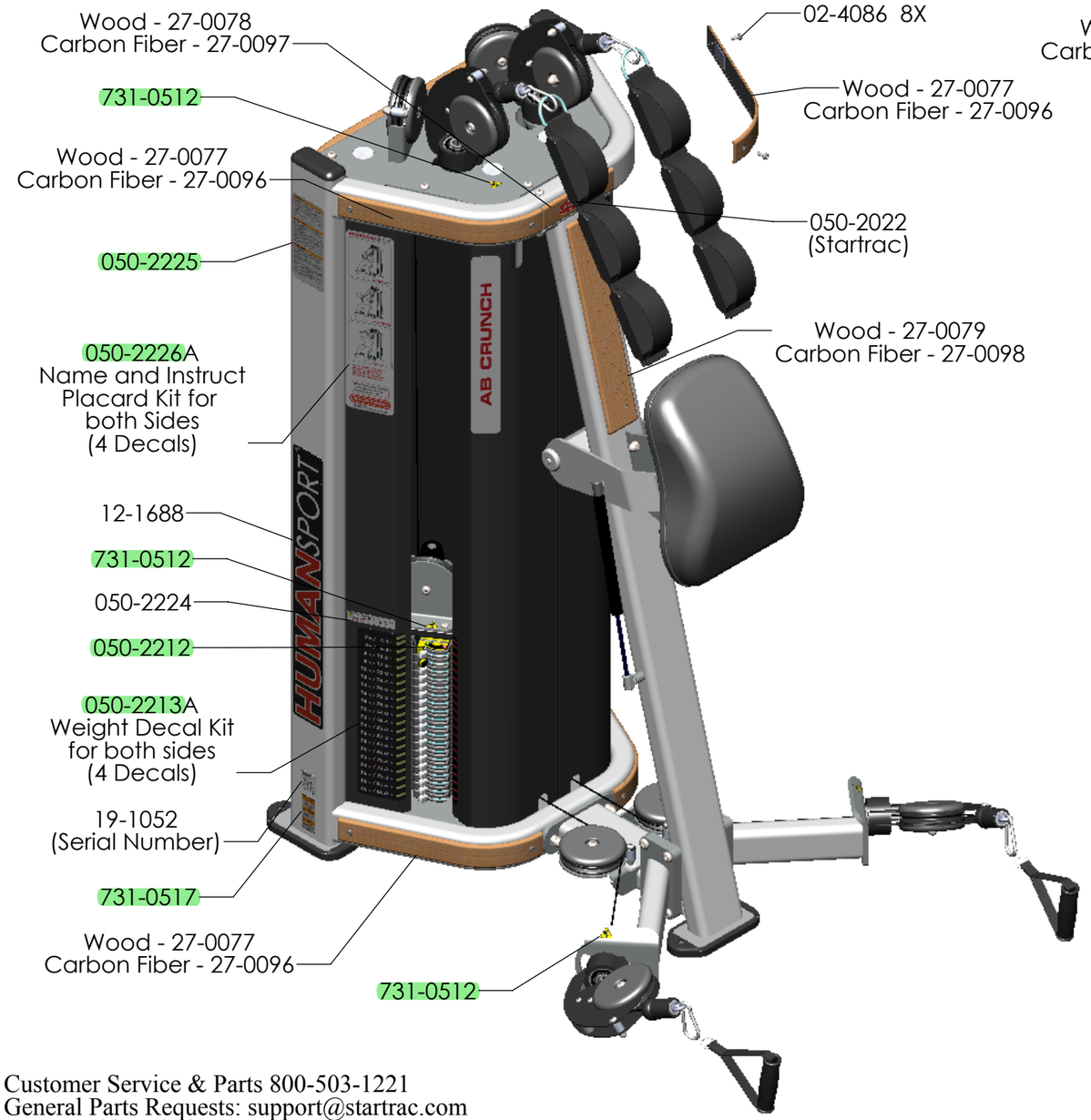

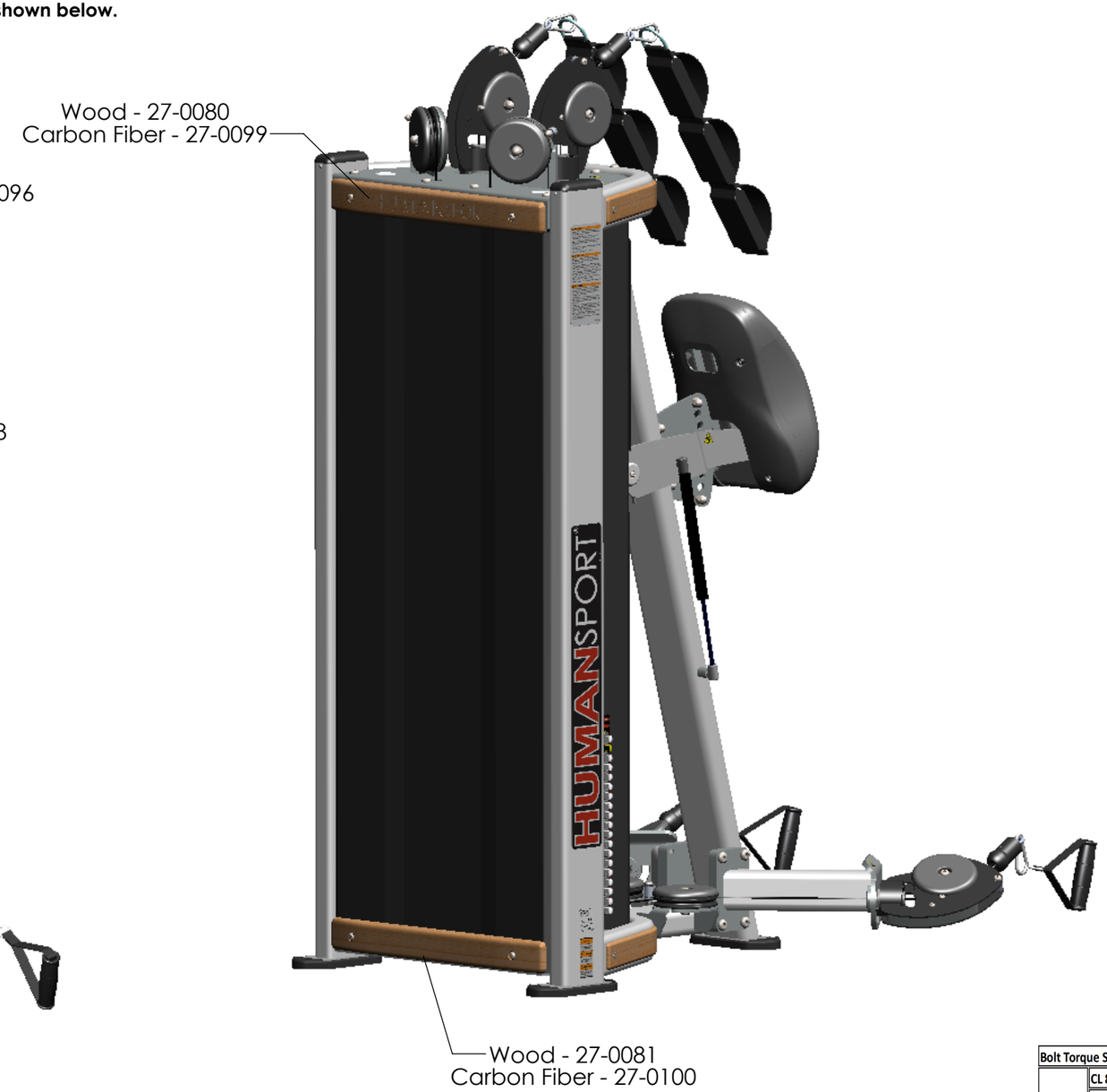

Bolt Torque Specifications		
	CL 8.8	CL 10.9
Size	Torque (N-M)	Torque (N-M)
M4-.7	3.1	
M6-1	10.4	15.5
M8-1.25	25	37
M10-1.5	51	75
M12-1.75	87	160
M14-2	140	205

Customer Service & Parts 800-503-1221
General Parts Requests: support@startrac.com
Core Health and Fitness, LLC.
support.startrac.com

HSAC2

REV H

Red: PAINTED ITEMS
Blue: KITS

1. All labeled components are to be assembled before shipment unless otherwise noted.
2. All bearings are to be pressed in with force applied to outer ring only.
3. All hardware to be torqued to specs listed in chart below.
4. Special notes if any are shown below.

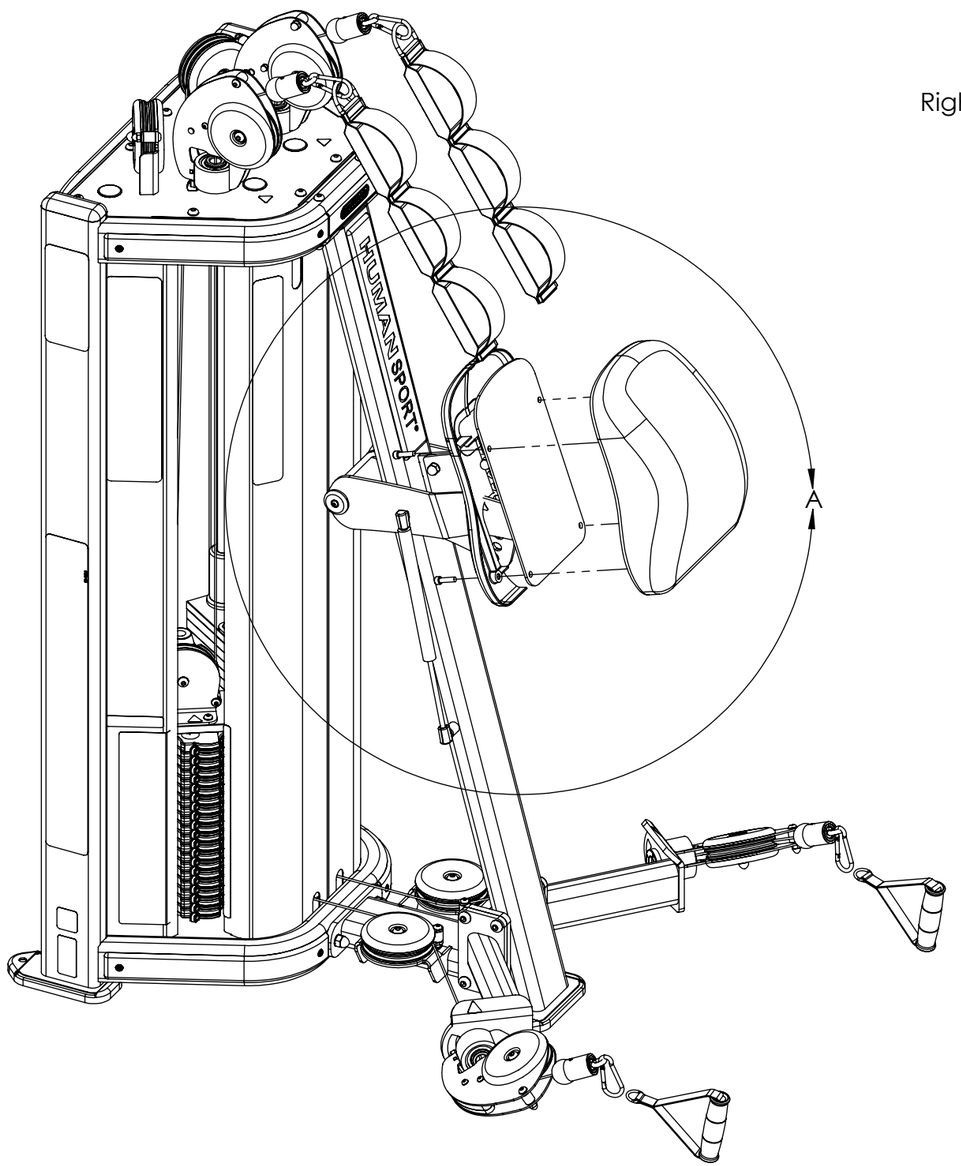

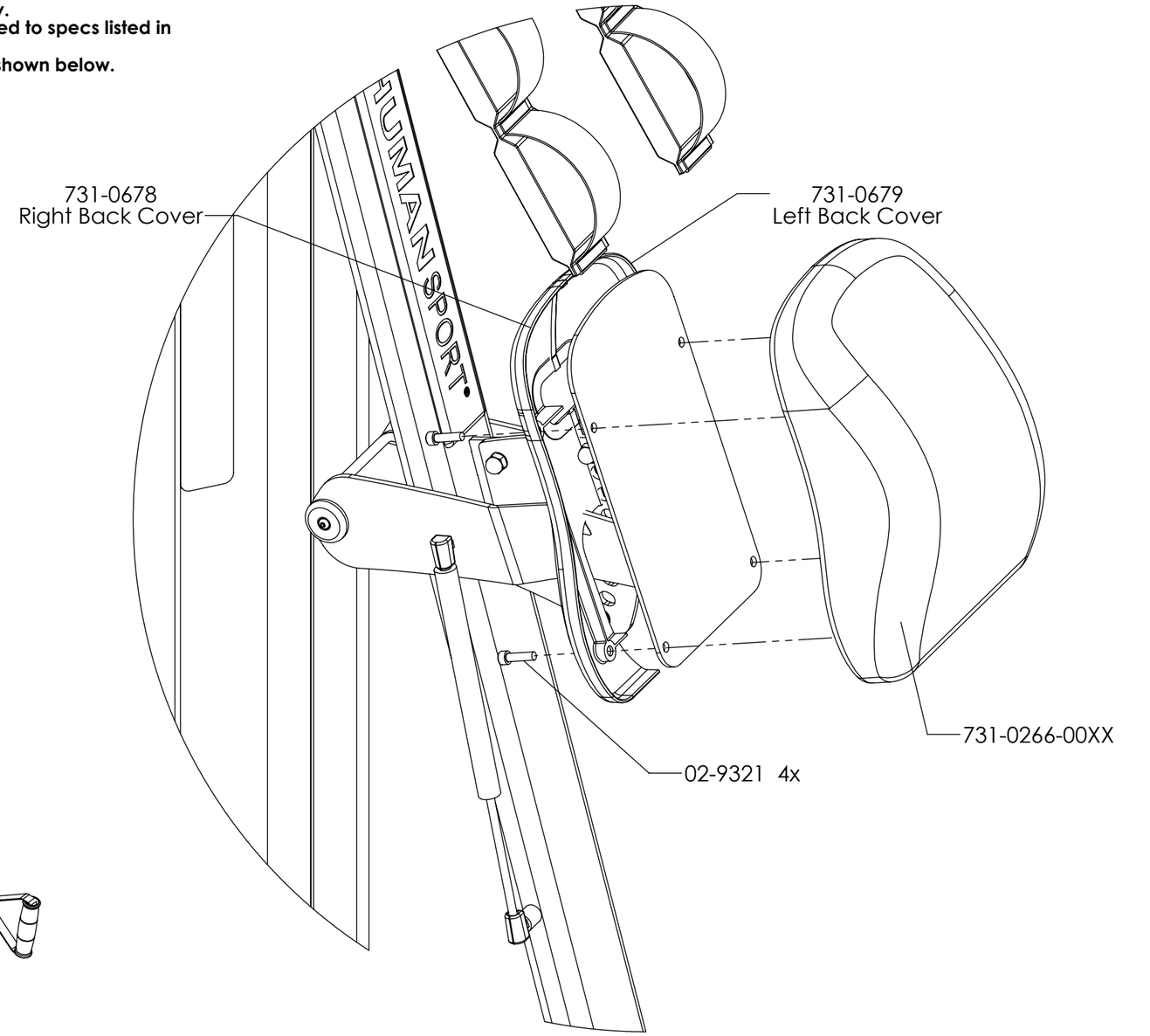

DETAIL A
SCALE 1 : 5

Bolt Torque Specifications		
	CL 8.8	CL 10.9
Size	Torque (N-M)	Torque (N-M)
M4-.7	3.1	
M6-1	10.4	15.5
M8-1.25	25	37
M10-1.5	51	75
M12-1.75	87	160
M14-2	140	205

Customer Service & Parts 800-503-1221
General Parts Requests: support@startrac.com
Core Health and Fitness, LLC.
support.startrac.com

HSAC2

REV H

Red: PAINTED ITEMS
Blue: KITS

1. All labeled components are to be assembled before shipment unless otherwise noted.
2. All bearings are to be pressed in with force applied to outer ring only.
3. All hardware to be torqued to specs listed in chart below.
4. Special notes if any are shown below.

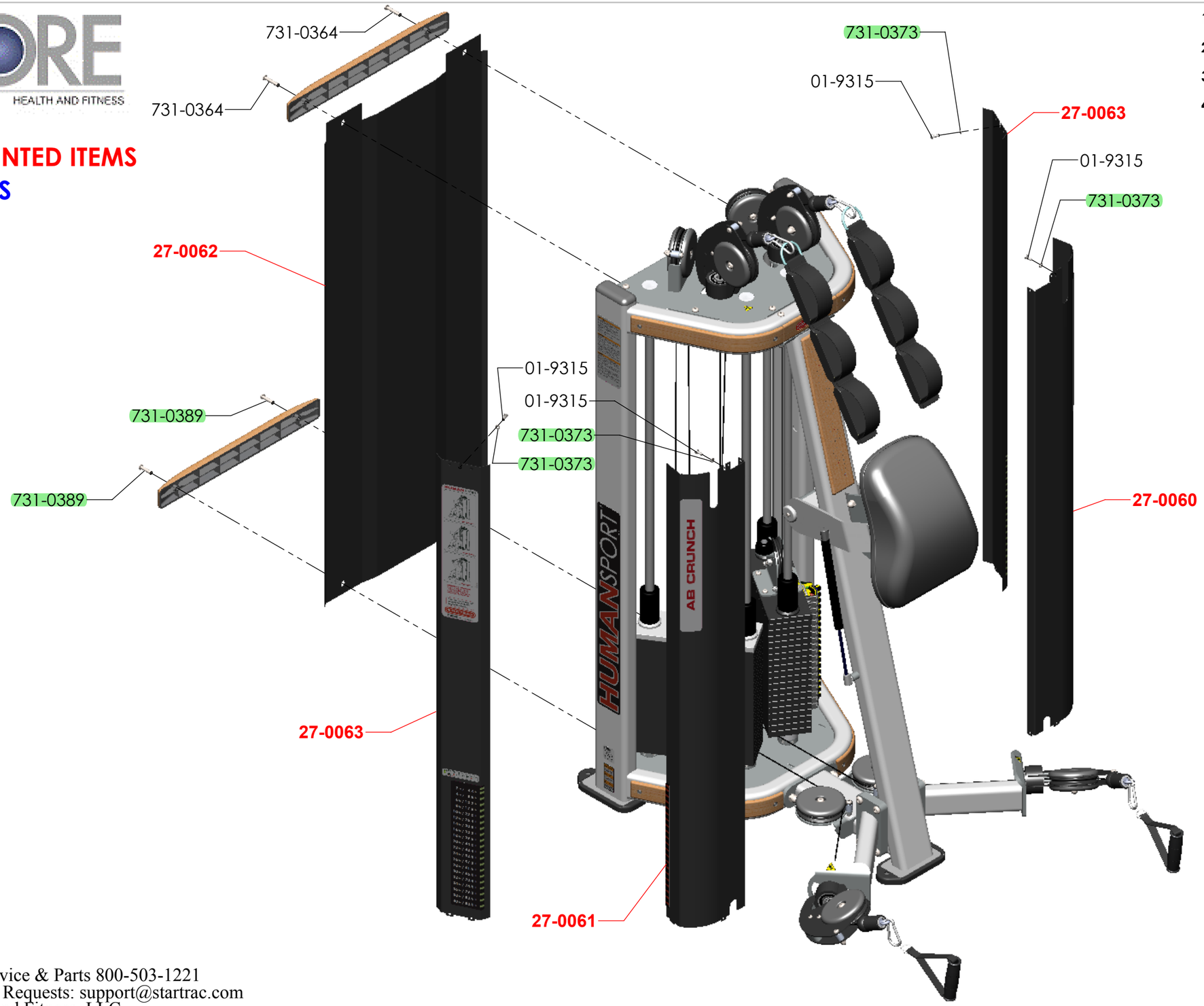

Bolt Torque Specifications		
	CL 8.8	CL 10.9
Size	Torque (N-M)	Torque (N-M)
M4-.7	3.1	
M6-1	10.4	15.5
M8-1.25	25	37
M10-1.5	51	75
M12-1.75	87	160
M14-2	140	205

Customer Service & Parts 800-503-1221
General Parts Requests: support@startrac.com
Core Health and Fitness, LLC.
support.startrac.com

HSAC2 ***REV H***

Red: PAINTED ITEMS
Blue: KITS

1. All labeled components are to be assembled before shipment unless otherwise noted.
2. All bearings are to be pressed in with force applied to outer ring only.
3. All hardware to be torqued to specs listed in chart below.
4. Special notes if any are shown below.

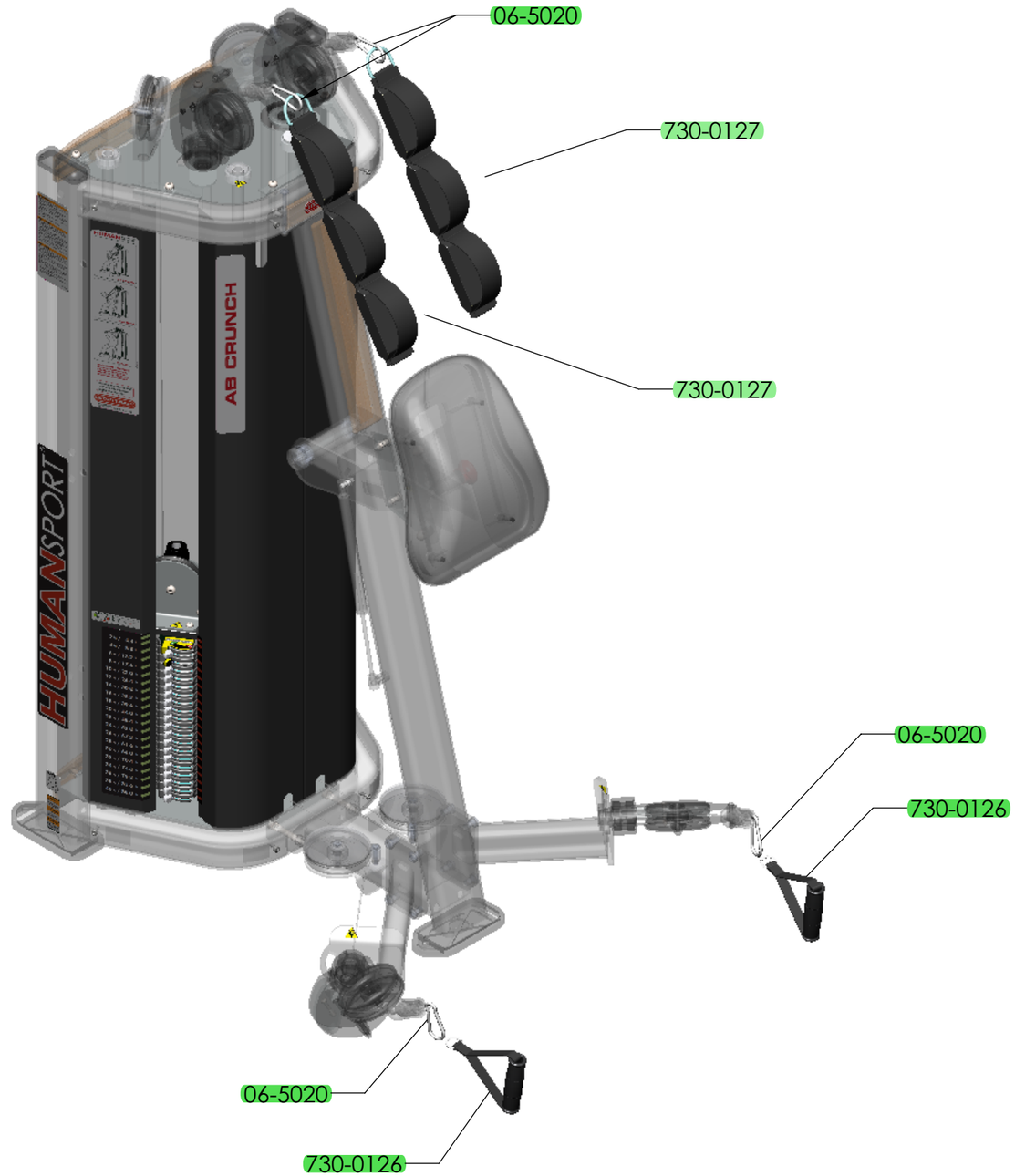

Bolt Torque Specifications		
	CL 8.8	CL 10.9
Size	Torque (N-M)	Torque (N-M)
M4-.7	3.1	
M6-1	10.4	15.5
M8-1.25	25	37
M10-1.5	51	75
M12-1.75	87	160
M14-2	140	205

Customer Service & Parts 800-503-1221
General Parts Requests: support@startrac.com
Core Health and Fitness, LLC.
support.startrac.com

HSAC2

REV H

Red: PAINTED ITEMS
Blue: KITS

1. All labeled components are to be assembled before shipment unless otherwise noted.
2. All bearings are to be pressed in with force applied to outer ring only.
3. All hardware to be torqued to specs listed in chart below.
4. Special notes if any are shown below.

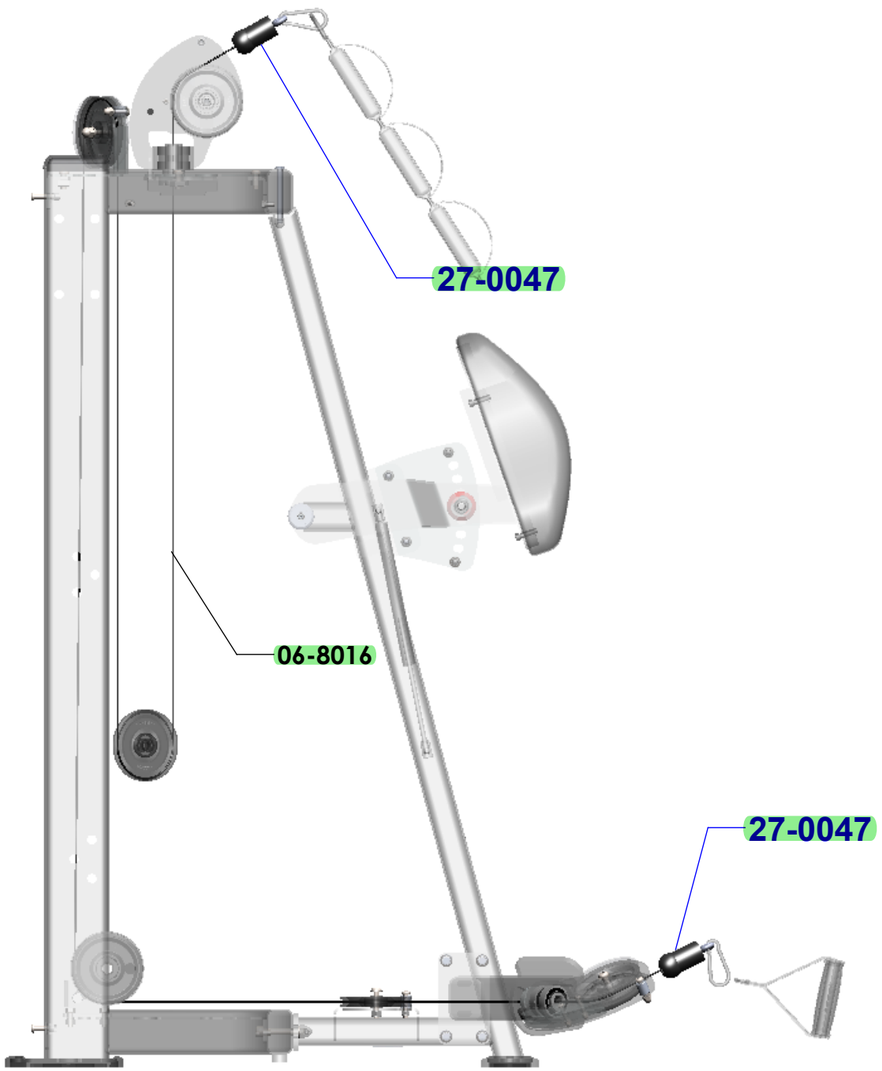

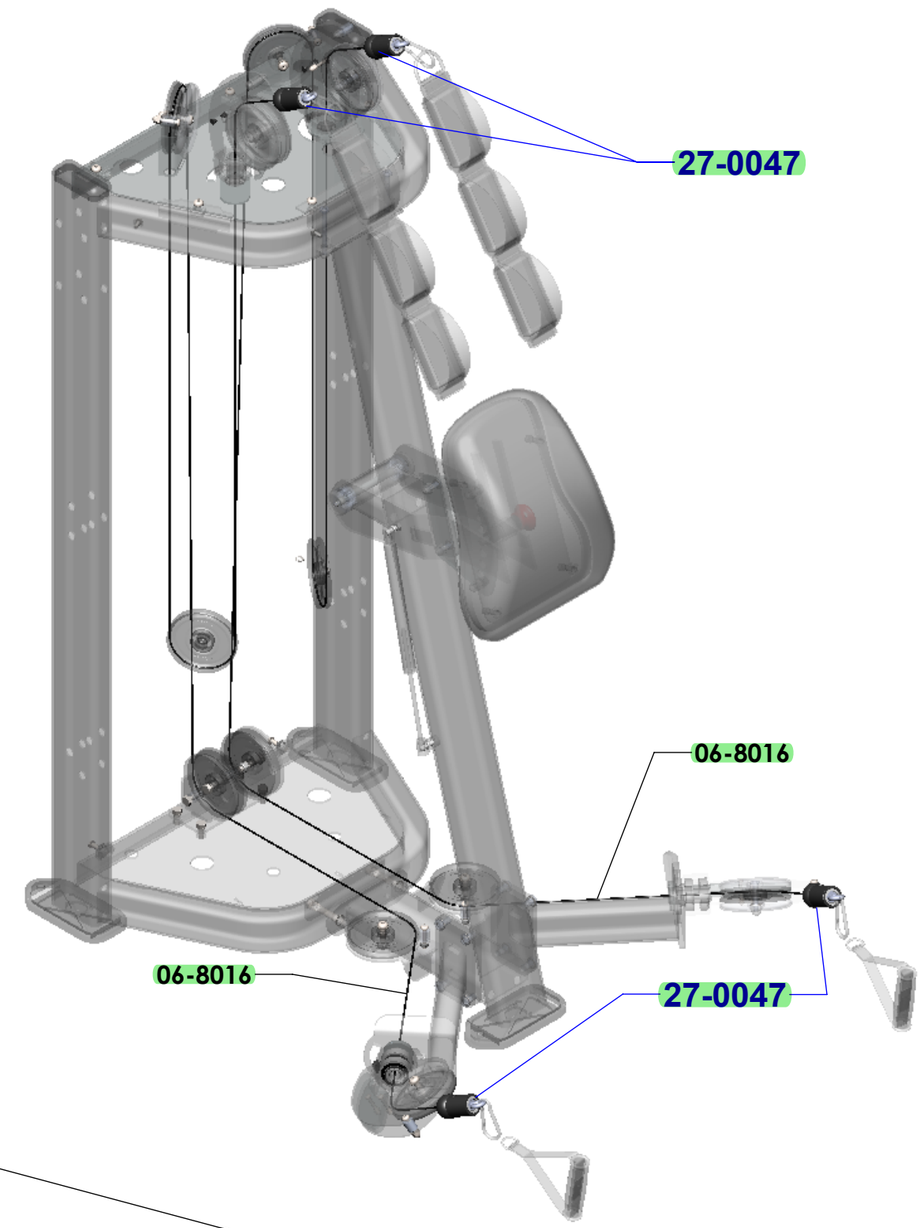

Exploded View of 27-0047
Handle Swivel Assembly

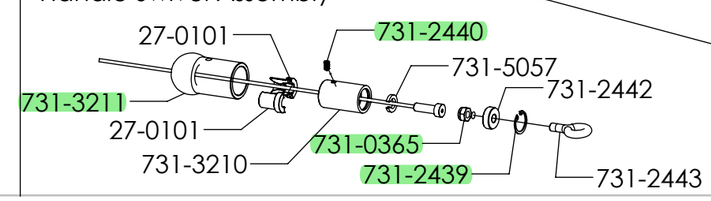

Customer Service & Parts 800-503-1221
General Parts Requests: support@startrac.com
Core Health and Fitness, LLC.
support.startrac.com

HSAC2 **REV H**

Bolt Torque Specifications		
	CL 8.8	CL 10.9
Size	Torque (N-M)	Torque (N-M)
M4-.7	3.1	
M6-1	10.4	15.5
M8-1.25	25	37
M10-1.5	51	75
M12-1.75	87	160
M14-2	140	205

Red: PAINTED ITEMS
Blue: KITS

1. All labeled components are to be assembled before shipment unless otherwise noted.
2. All bearings are to be pressed in with force applied to outer ring only.
3. All hardware to be torqued to specs listed in chart below.
4. Special notes if any are shown below.

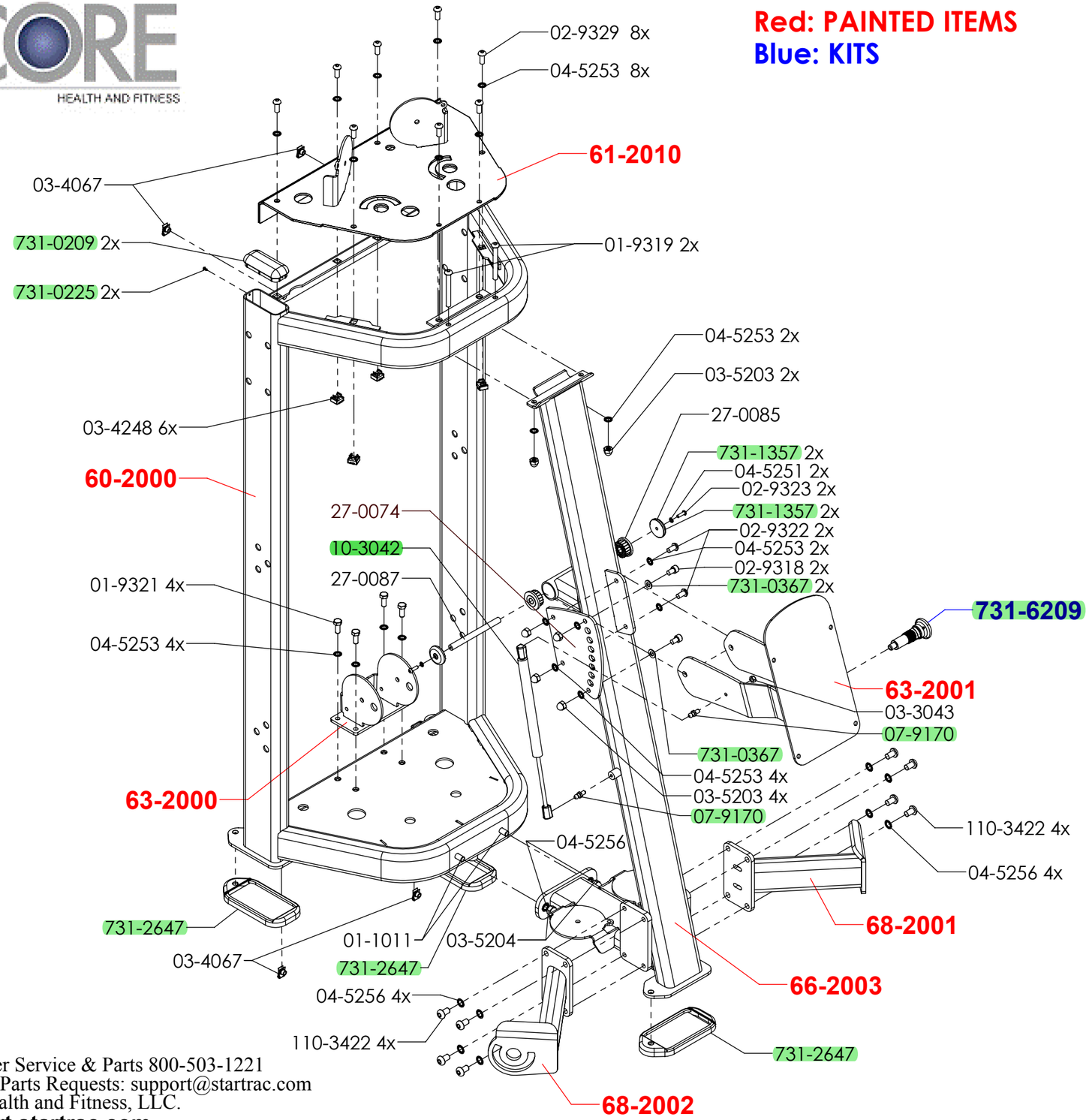

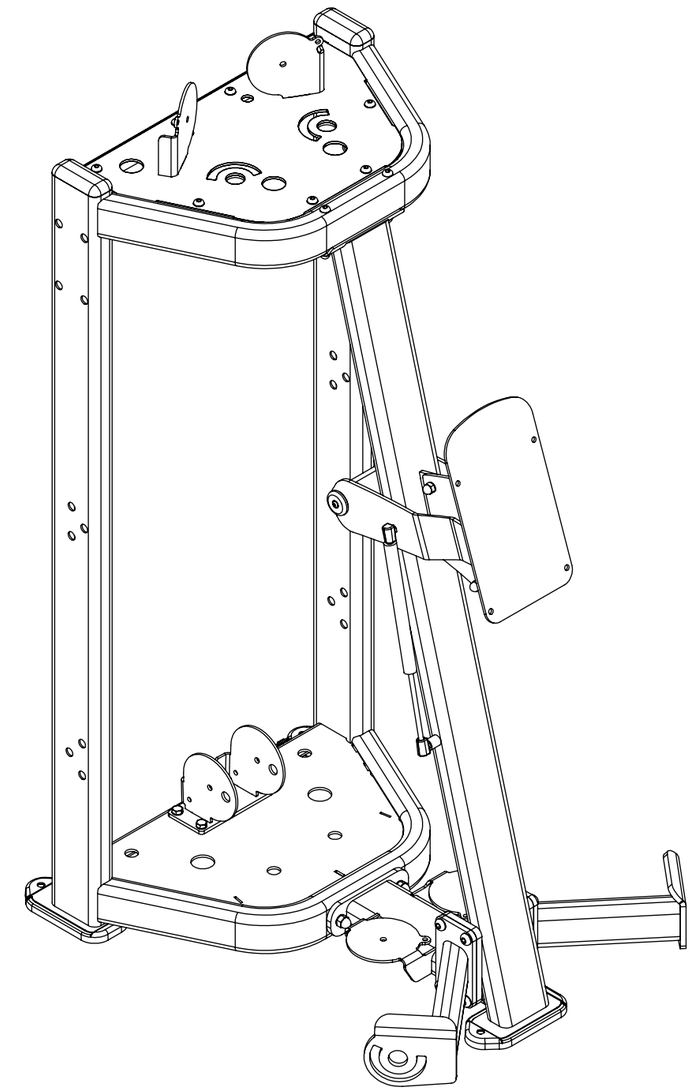

Bolt Torque Specifications		
	CL 8.8	CL 10.9
Size	Torque (N-M)	Torque (N-M)
M4-.7	3.1	
M6-1	10.4	15.5
M8-1.25	25	37
M10-1.5	51	75
M12-1.75	87	160
M14-2	140	205

Customer Service & Parts 800-503-1221
General Parts Requests: support@startrac.com
Core Health and Fitness, LLC.
support.startrac.com

HSAC2

REV H

Red: PAINTED ITEMS
Blue: KITS

1. All labeled components are to be assembled before shipment unless otherwise noted.
2. All bearings are to be pressed in with force applied to outer ring only.
3. All hardware to be torqued to specs listed in chart below.
4. Special notes if any are shown below.

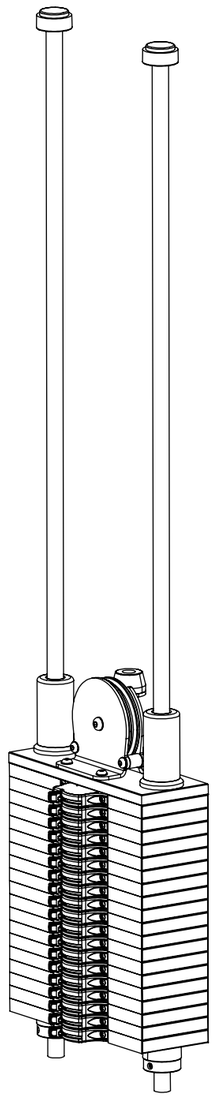

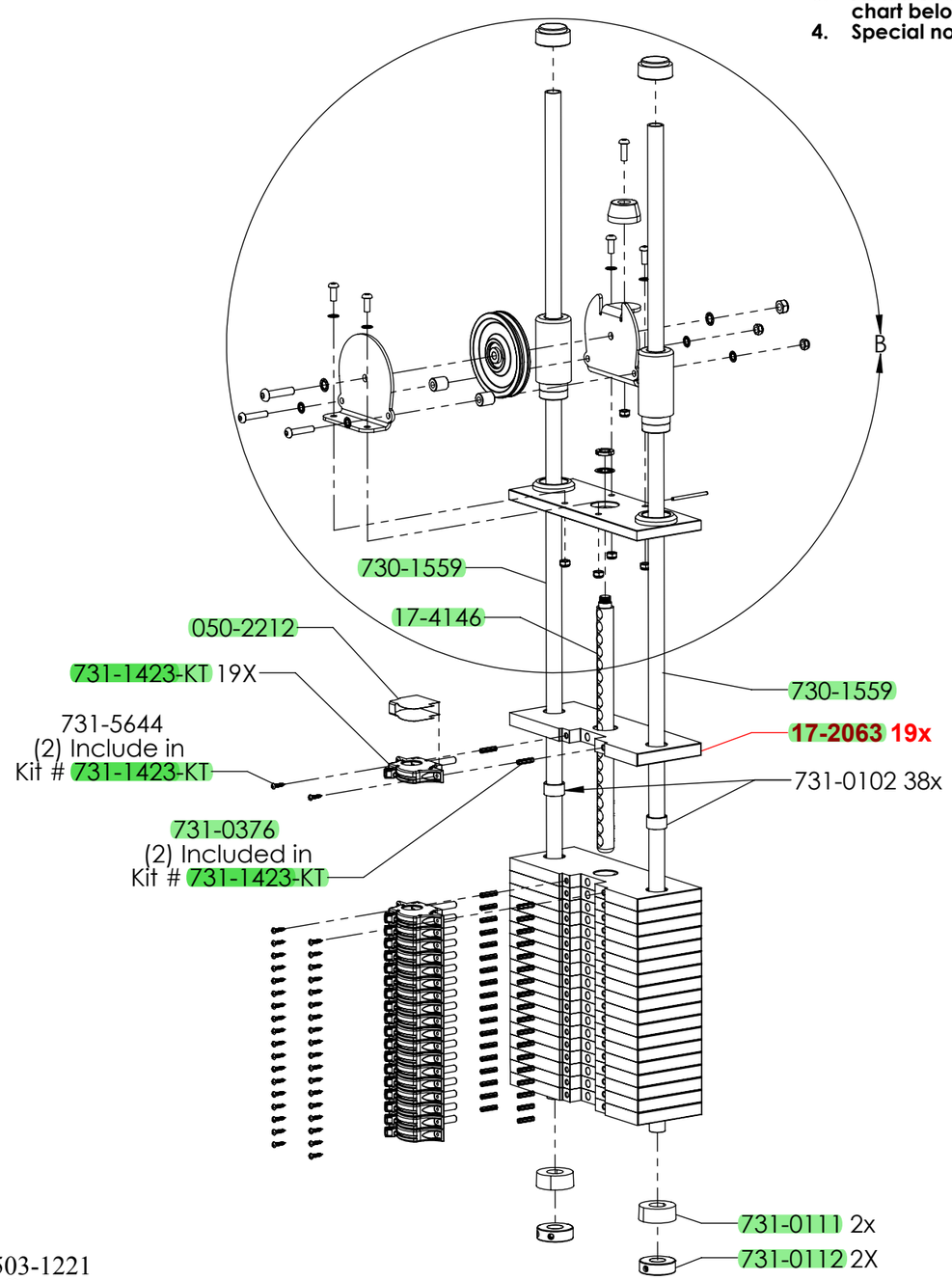

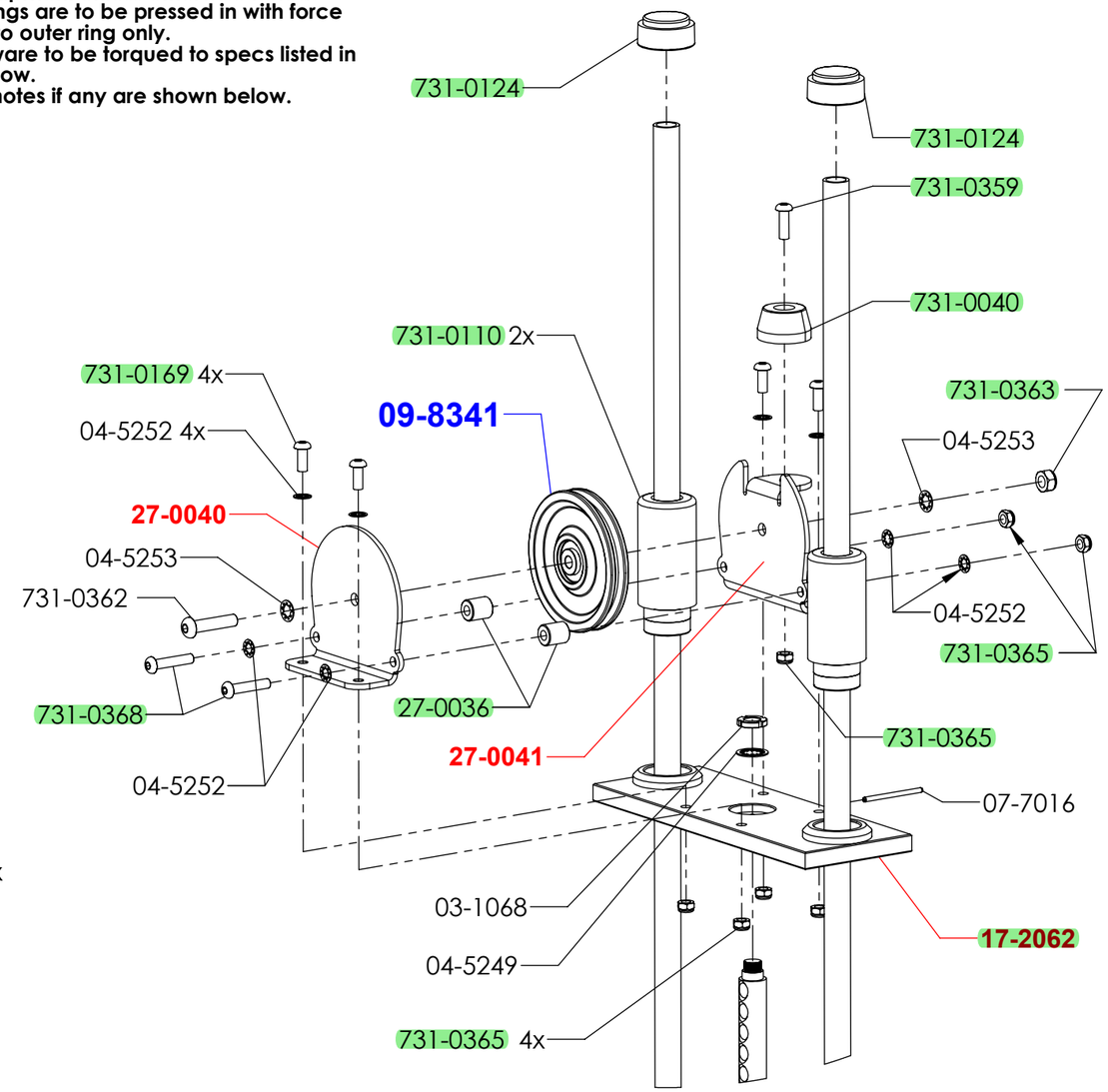

DETAIL B
SCALE 1 : 5

Bolt Torque Specifications		
	CL 8.8	CL 10.9
Size	Torque (N-M)	Torque (N-M)
M4-.7	3.1	
M6-1	10.4	15.5
M8-1.25	25	37
M10-1.5	51	75
M12-1.75	87	160
M14-2	140	205

Customer Service & Parts 800-503-1221
General Parts Requests: support@startrac.com
Core Health and Fitness, LLC.
support.startrac.com

HS Weight Stack System ***REV H***

Red: PAINTED ITEMS
Blue: KITS

1. All labeled components are to be assembled before shipment unless otherwise noted.
2. All bearings are to be pressed in with force applied to outer ring only.
3. All hardware to be torqued to specs listed in chart below.
4. Special notes if any are shown below.

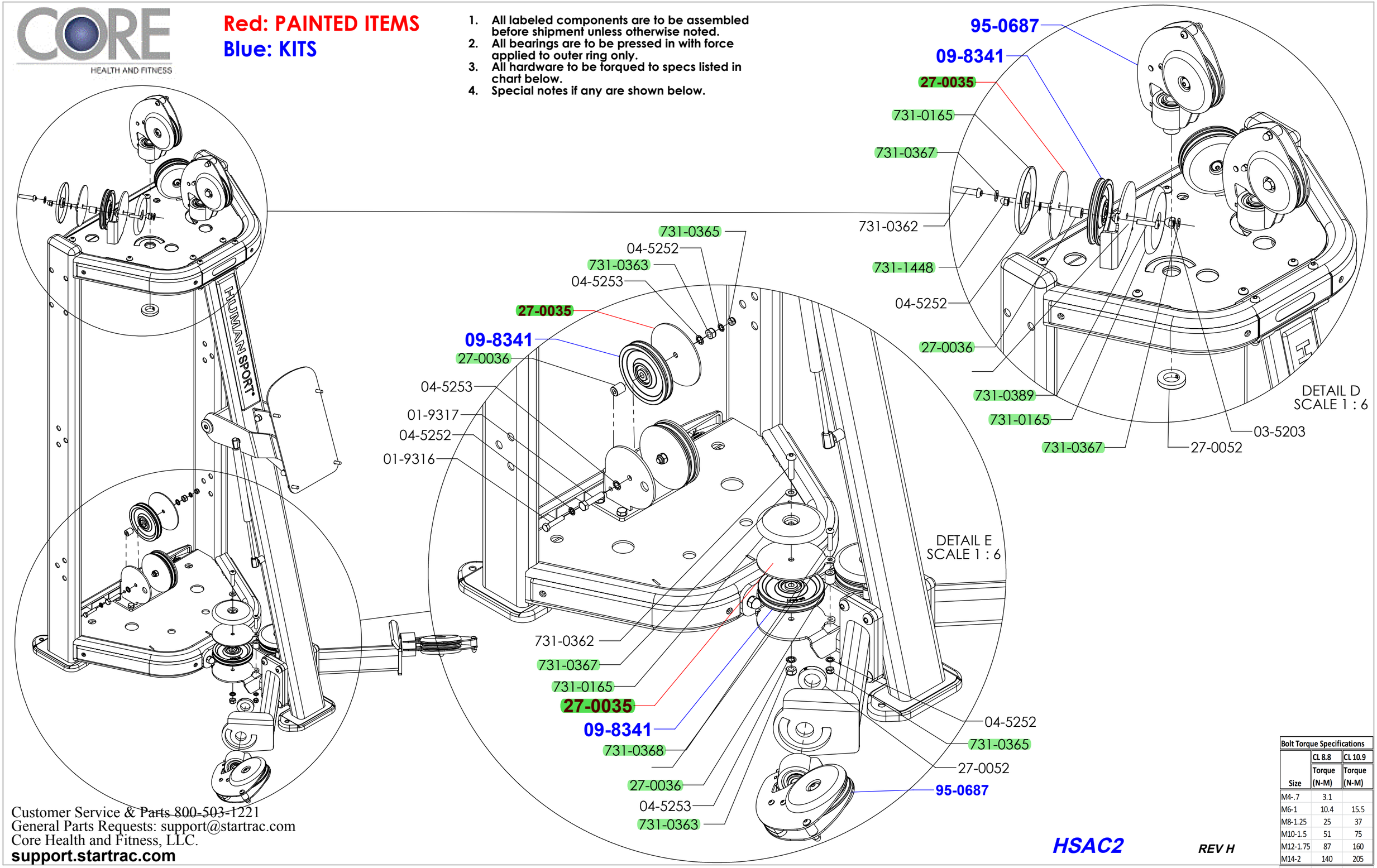

Bolt Torque Specifications		
	CL 8.8	CL 10.9
Size	Torque (N-M)	Torque (N-M)
M4-.7	3.1	
M6-1	10.4	15.5
M8-1.25	25	37
M10-1.5	51	75
M12-1.75	87	160
M14-2	140	205

Customer Service & Parts 800-503-1221
General Parts Requests: support@startrac.com
Core Health and Fitness, LLC.
support.startrac.com

HSAC2 ***REV H***

Red: PAINTED ITEMS
Blue: KITS

1. All labeled components are to be assembled before shipment unless otherwise noted.
2. All bearings are to be pressed in with force applied to outer ring only.
3. All hardware to be torqued to specs listed in chart below.
4. Special notes if any are shown below.

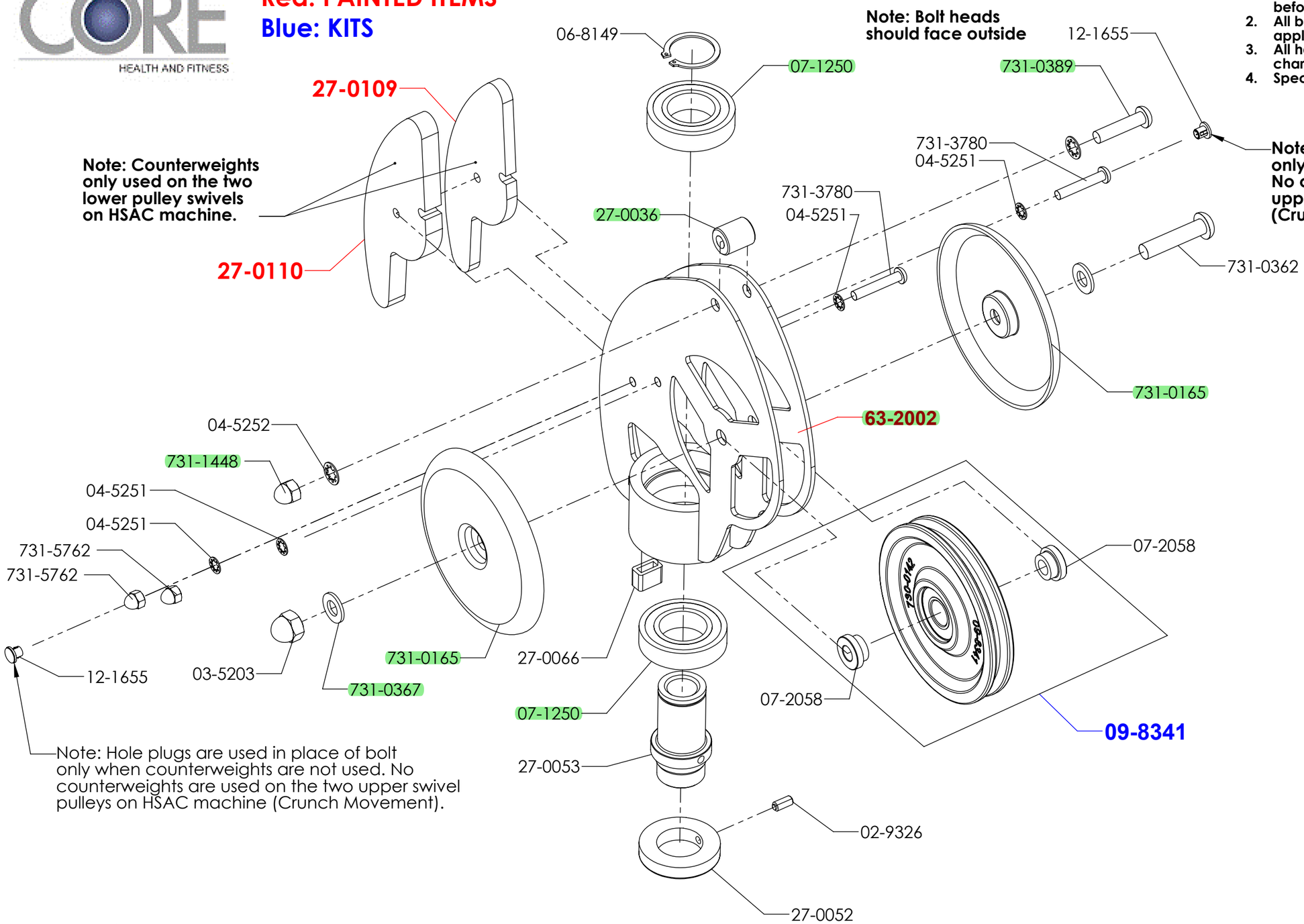

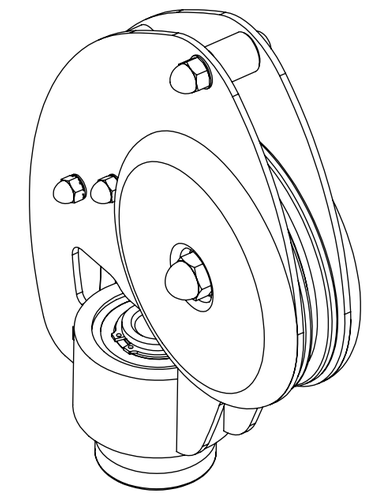

95-0687

Bolt Torque Specifications		
	CL 8.8	CL 10.9
Size	Torque (N-M)	Torque (N-M)
M4-.7	3.1	
M6-1	10.4	15.5
M8-1.25	25	37
M10-1.5	51	75
M12-1.75	87	160
M14-2	140	205

Customer Service & Parts 800-503-1221
General Parts Requests: support@startrac.com
Core Health and Fitness, LLC.
support.startrac.com

Swivel Pulley Bracket Assembly

HSAC2

REV H

Red: PAINTED ITEMS
Blue: KITS

1. All labeled components are to be assembled before shipment unless otherwise noted.
2. All bearings are to be pressed in with force applied to outer ring only.
3. All hardware to be torqued to specs listed in chart below.
4. Special notes if any are shown below.

Upper Swiveling Pulley Brackets DO NOT get counterweights.

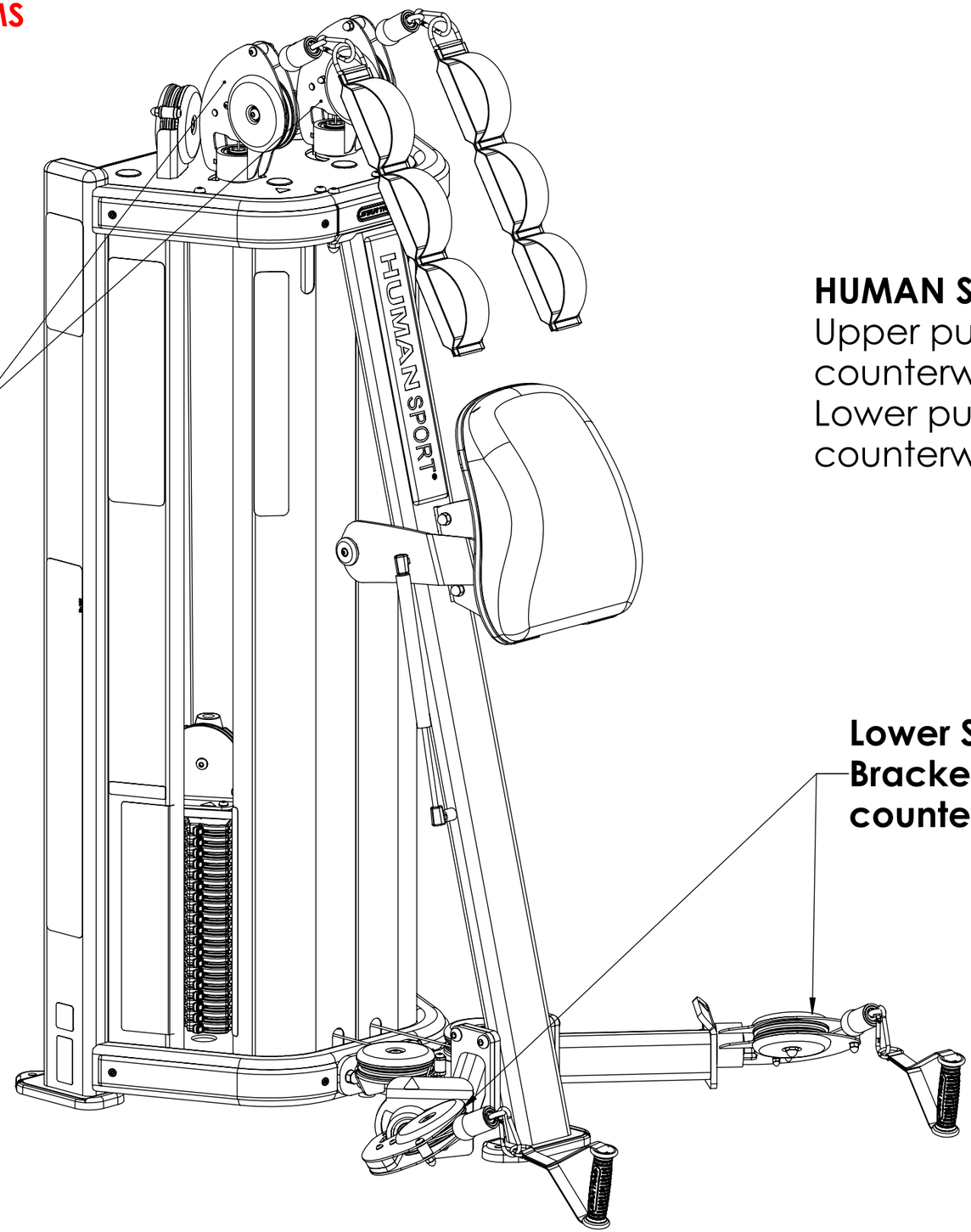

HUMAN SPORT ARM CRUNCH:
Upper pulley brackets do not get counterweights.
Lower pulley brackets do get counterweights.

Lower Swiveling Pulley Brackets DO get counterweights.

Bolt Torque Specifications		
	CL 8.8	CL 10.9
Size	Torque (N-M)	Torque (N-M)
M4-.7	3.1	
M6-1	10.4	15.5
M8-1.25	25	37
M10-1.5	51	75
M12-1.75	87	160
M14-2	140	205

Customer Service & Parts 800-503-1221
General Parts Requests: support@startrac.com
Core Health and Fitness, LLC.
support.startrac.com

HSAC2

REV H